Operating Instructions

Control unit Ex p

> 8625/1-60-..-

STAHL

1 Contents

1 Contents 2
2 General Information 2
3 General Safety Instructions 3
4 Designated Use 4
5 Technical Data 4
6 Transport, Storage and Disposal 6
7 Assembly 6
8 Parameters and Operating Modes 10
9 Putting into Operation 16
10 Maintenance 16
11 Accessories and Spare Parts 17
12 Type Examination Certificate (Page 1) 18
13 EC Declaration of Conformity 19

2 General Information

2.1 Manufacturer

R. STAHL Schaltgeräte GmbH
Am Bahnhof 30
D-74638 Waldenburg

Phone: +49 7942 943-0
Fax: +49 7942 943-4333
Internet: www.stahl-ex.com

2.2 Operating Instructions Information

ID NO.: 156113 / 8625601300
Publication Code: 2010-07-14·BA00·III·en·05

We reserve the right to make technical changes without notice.

2.3 Symbols used

▶	Action request: Describes actions to be carried out by the user.
▷	Reaction sign: Describes the results or the reactions to the actions taken.
✗	Bullet
☞	Sentinel: Describes the notes and recommendations.
	Warning sign; danger from energised parts!
	Warning sign: Danger due to an explosive atmosphere!

3 General Safety Instructions

3.1 Safety Instructions for Assembly and Operating Personnel

The operating instructions contain basic safety instructions to be observed during installation, operation and maintenance. Non-observance will endanger persons, plant and the environment.

⚠WARNING
Danger due to unauthorised work being performed on the device! ▷ Risk of injury and damage to equipment. ▶ Mounting, installation, commissioning, operation and maintenance must only be performed by personnel who are both authorised and suitably trained for this purpose.

Before assembly/commissioning:

- ▶ Read through the operating instructions.
- ▶ Give adequate training to the assembly and operating personnel.
- ▶ Ensure that the contents of the operating instructions are fully understood by the personnel in charge.
- ▶ The national installation and assembly regulations (e.g. IEC/EN 60079-14) apply.

When operating the device:

- ▶ Ensure the operating instructions are made available on location at all times.
- ▶ Observe safety instructions.
- ▶ Observe national safety and accident prevention regulations.
- ▶ Only run the device according to its performance data.
- ▶ Maintenance or repair work not described in the operating instructions must not be performed without prior agreement with the manufacturer.
- ▶ Any damage may compromise the explosion protection.
- ▶ No changes may be made to the devices or their components that compromise explosion protection.
- ▶ Install and use the device only if it is undamaged, dry and clean.

If you have questions:

- ▶ Contact the manufacturer.

3.2 Warnings

Warnings are sub-divided in these operating instructions according to the following scheme:

⚠WARNING
Type and source of danger. ▷ Possible consequences. ▶ Measures to avoid danger.

They are always identified by the signalling word “WARNING“ and sometimes also have a symbol which is specific to the danger involved.

3.3 Conformity to Standards

The device complies with the following standards and regulations:

- ✗ Directive 94/9/EC
- ✗ IEC/EN 60079-0, IEC/EN 60079-1, IEC/EN 60079-2, IEC/EN 60079-7, IEC/EN 60079-11, IEC/EN 60079-18
- ✗ IEC/EN 61241-0, IEC/EN 61241-1

4 Designated Use

The control unit 8625/1-60-..- is an explosion-protected device to monitor and control the overpressure in the Ex p housing.

In connection with an appropriate housing with the ingress protection ≥ IP54 (IP65 recommended) and the air supply unit, the control unit offers a pressurized protection.

In connection with the air supply unit, the control unit 8625/1-60-..- is approved for use in hazardous areas zones 2 and 22 (class III).

In the zone 22, the control unit without air escape can only be used for reporting the overpressure and it must be used together with a leakage compensation.

The control unit controls the overpressure in the Ex-p enclosure and monitors the states via the output contacts.

As soon as the preset threshold value is reached, compressed air or inert gas is passed in via the air supply unit.

In zone 2, also the purging or the operation with continuous purging is possible.

⚠ WARNING
Only use the device for its intended purpose! ▷ Otherwise, the manufacturer's liability and warranty expire. ▶ Only use the device under the operating conditions described in the operating instructions. ▶ The device must only be used in areas subject to explosion hazards according to these operating instructions.

5 Technical Data

Safety data	
Gas explosion protection	Ⓔx II 2 G Ex e mb [pz] [ia] IIC T4 or Ⓔx II 2 G Ex d mb [pz] [ia] IIC T4
Dust explosion protection	Ⓔx II 2 D IP66 T70°C
Certificates	TÜV 06 ATEX 553116
Rated operational voltage	12 V / 24 V DC 24 V / 115 V AC ± 10%; 48 .. 62 Hz 230 V AC + 8,5 / - 10%; 48 .. 62 Hz 250 V AC + 5 / -15 %; 48 .. 62 Hz
Rated operational current	250 mA at 12 / 24 V DC 300 mA at 24 V AC 60 mA at 115 V AC 30 mA at 230 / 250 V AC

Ambient temperature	- 30 °C ≤ T_{amb} ≤ + 60 °C
Enclosure material	Epoxy resin, glass-fiber reinforced, black, antistatic
Switching threshold	of the output relay according to DIN/VDE 0435:

Contact potential	Type of current	max. current value	Power factor cos φ	Service category	L/R
250 V	AC	6A / 12 A*	1		
240 V	AC	3 A	0.3	AC-15	
24 V	DC	6A / 12 A*			0 ms
30 V	DC	2.5 A		DC-13	50 ms

acc.to EN 50028 (“m“): 12 A; acc. to EN 60079-18 (“mb“): 6 A

Terminals	
Rated current	32 A for rated cross section and T_a ≤ 40 °C
Rated cross section	4 mm^2 (12 AWG)
Terminal capacity	0.2 .. 4 mm^2 (24 .. 12 AWG)

Dimensional Drawings (All Dimensions in mm) - Subject to Alterations

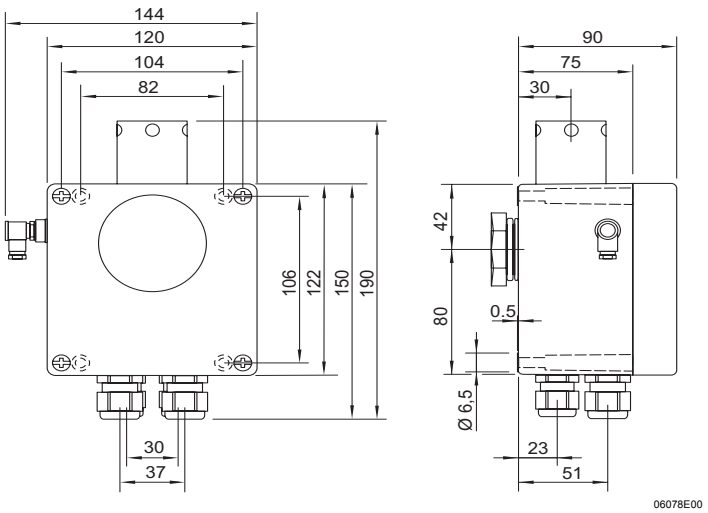

Control unit 8625/1-60-..-..

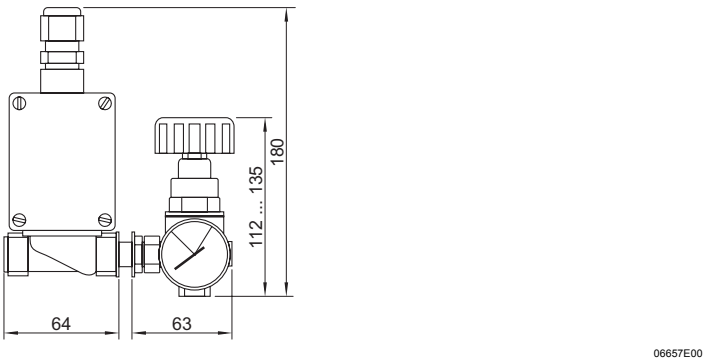

Air supply unit

6 Transport, Storage and Disposal

Transport

▶ Shock-free in its original carton, do not drop, handle carefully.

Storage

▶ Store in a dry place in its original packaging

Disposal

▶ Ensure environmentally friendly disposal of all components according to legal regulations.

7 Assembly

☞	Any mounting position is possible but make sure that the display is still legible.

7.1 Drilling of the assembly bore holes

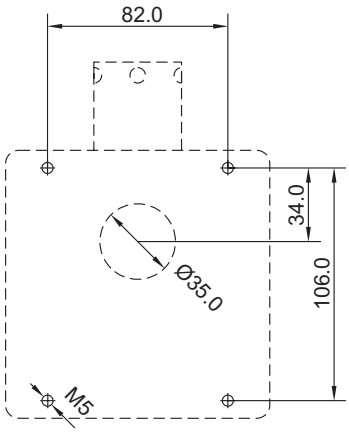

06357E00

Fig. 7-1: Drill pattern for control unit

Drill the following assembly holes on the housing wall:

✗ 4 threaded holes M5 (see Fig. 7-1)
✗ 1 hole ∅ 35 mm for intake screw connection (see Fig. 7-1)
✗ 1 hole ∅ 17 mm for air supply unit

7.2 Setting leakage air volume on air supply unit

☞	The leakage nozzle is set at factory to an air volume of 15 l/min, at a pressure of 2 bar. The pressure controller is set at factory to a pressure of 2 bar.

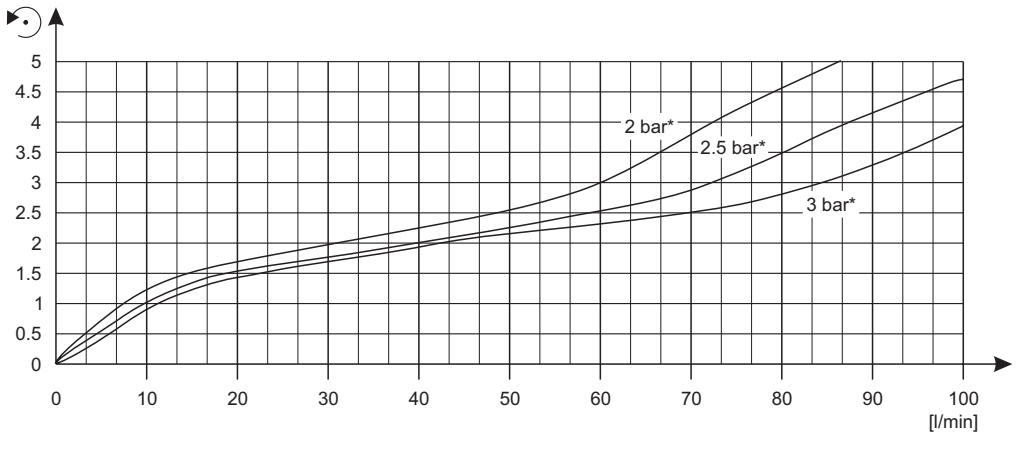

* pressure set at pressure controller

Fig. 7-2: Leakage air diagram

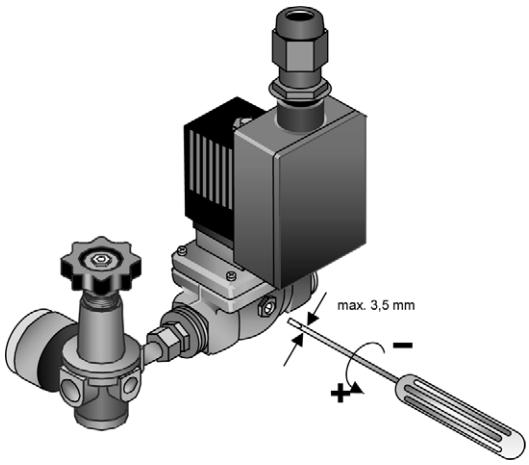

Fig. 7-3: Setting the leakage air volume

- Close the adjusting screw on the solenoid valve in clockwise direction as far as possible.
- Turn the adjusting screw in anti-clockwise direction until the desired leakage air volume is reached (see leakage air diagram, Fig. 7-2)

7.3 Assembly of the components

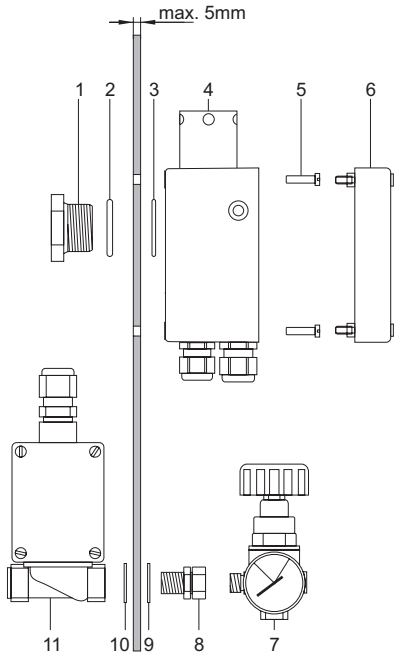

06358E00

Fig. 7-4: Assembly of the components

- Place the O-ring 33.7 x 2.2 mm (3) between housing wall and control unit (4) and fix them with the fixing screws (5).
- Screw the intake screw connection (1) together with the O-ring 33.7 x 3.5 mm (2) into the control unit.
- Mount the solenoid valve (11) and the sealing disks (9,10) with the connecting piece (8).
- Mount the pressure controller (7) on the connecting piece.
- Connect the pressure controller to the compressed air supply or the inert gas supply.

7.4 Connection of the components

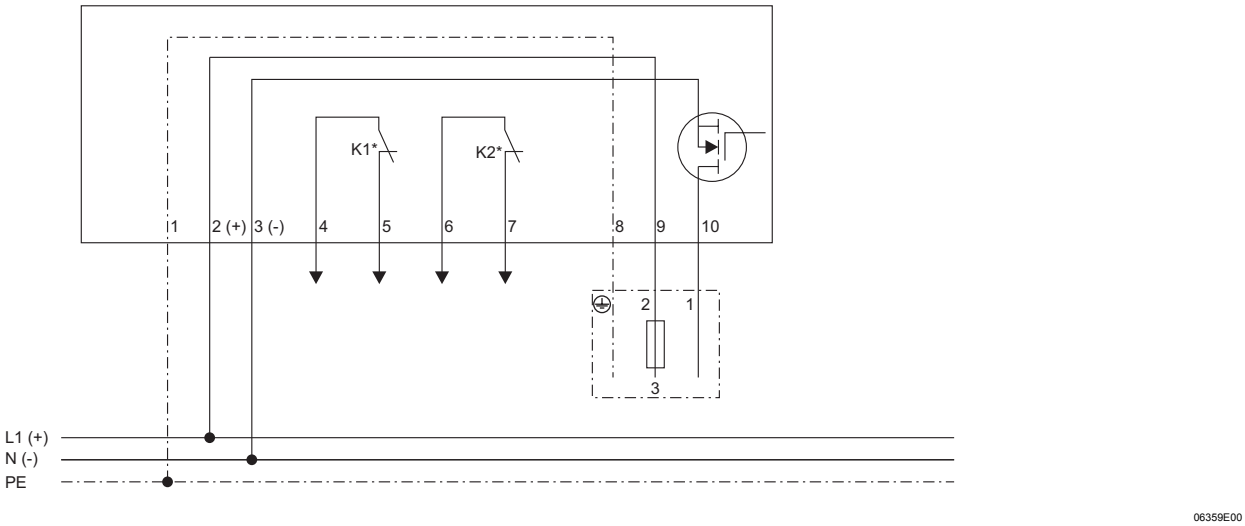

Fig. 7-5: Circuit diagram

- Carry out the connection of the control unit to mains supply and the connection between control unit and solenoid valve in accordance with the circuit diagram (see Fig. 7-5)
- Connect other signalling devices to the potential-free contacts K1 and K2, if necessary.
- Close carefully the housing cover of the control unit.
- Screw carefully down all the cable entries.
- Ensure that unused cable entries are sealed with plugs certified to Directive 94/9/EC.

8 Parameters and Operating Modes

Control unit 8625/1-60-.. purges the enclosure (as required) and monitors and controls the pressure of the inert gas in the enclosure in regard to the ambient atmosphere during continuous operation. The required valves (optional) are controlled with terminals "Valve" or two potential-free relay contacts. Furthermore, the internal temperature of the enclosure may be measured and lowered by inserting cooling air when a temperature sensor is connected to the bushing at the side. All settings can be done on the front plate which is self-explanatory:

8.1 Display and operating elements

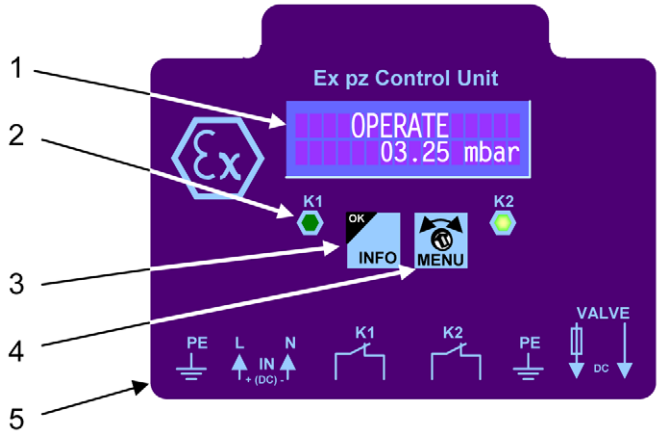

14013T00

	Display / operating element	Function
1	LED-backlit STN-LCD-display	Shows for example the current overpressure in the enclosure / volume flow or the programmed thresholds for overpressure, purging time or temperature which have an effect on the relay outputs K1, K2 or on the output "Valve" in clear.
2	LEDs	Indicate the switching status of contacts K1 and K2. When the LED is illuminated then the respective contact is closed.
3	Pushbutton	To query parameters (INFO) or to confirm settings (OK).
4	Rotary switch for a small screwdriver	To select a parameter or change its value by turning the screwdriver.
5	Symbols for terminal connections	PE = protective earth

8.2 Reading of parameters

The following parameters may be set or read:

- ✗ Overpressure at which relay K1 or K2 will react; adjustable from 0.3-25 mbar in 0.1 mbar steps (30 - 2500 Pa in 10 Pa steps)
- ✗ Switching function of relays K1 and K2 as NC or NO
- ✗ Purging time, adjustable from 0 to 255 minutes
- ✗ On- and Off-delay of contacts K1 and K2, adjustable from 0 to 60 seconds
- ✗ Minimum volume flow at which the purging time is counted, adjustable from 0.5 to 4 liters/s
- ✗ Temperature at which the valve (for cooling) will be turned on, adjustable from 10 to 55 °C, if a temperature sensor is connected to the 5-pole bushing

☞	To activate the INFO-/OK-button or the rotary switch the enclosure cover has to be screwed off. The display may be read any time through a magnifying window in the cover even when the enclosure is closed.

During normal operation (= "Operate") the display indicates the overpressure that is measured inside the enclosure in mbar:

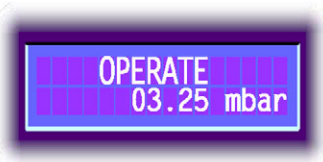

14014T00

☞	The indication always returns to normal operation when the INFO-/OK-button has not been pressed for 4 seconds. By pressing the INFO-/OK-button the following indications are displayed successively.

“Settings“ of “K1“

Indication of internal pressure for changing of K1 and the programmed switching function "nc" or "no".
Factory setting: "no", pressure: 0.3 mbar (30 Pa)

14015T00

“Settings“ of “K2“

Indication of internal pressure for changing of K2 and the programmed switching function "nc" or "no".
Factory setting: "no", pressure: 0.5 mbar (50 Pa)

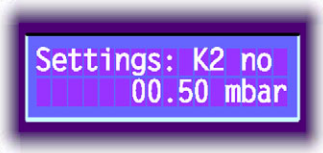

14016T00

“Settings“ of “Temp.“

Indication of temperature in °C at which a valve for cooling air will be turned on via terminals "Valve" (prerequisite: an optional temperature sensor is connected to the 5-pole bushing).
Factory setting 55°C

14017T00

“Settings“ of “Purge“
Indication of purging time in minutes when the purging time has not been set to 0.
Factory setting 1 minute

14018T00

“Settings“ of “Delay“
Indication of relay delay in seconds.
Factory setting 1 second

14019T00

“Settings“ of “PrStart“ (PrStart = Purge Start)
Indication of minimum gas flow in liters per second from which on the purging time is counted, readable under "Purge".
Factory setting 1.5 l/s

14020T00

8.3 Setting of Parameters

☞	To change the parameters introduced under 8.2 select these parameters with rotary switch "MENU", which can be operated with a small screwdriver, instead of with "INFO/OK". You can interrupt the programming any time by not doing any settings within ca. 4 seconds or by confirming the present values with "OK". Indication will then return to normal operation and will show internal pressure.

▶ Turn the "MENU" switch until the display shows the parameter you want to change. It does not matter if you turn the switch left or right; with every switching step the indication will show the next parameter. When you have reached the desired parameter press button "INFO/OK".

▷ The display now shows "Adjust". The value that has been programmed last is indicated.

14021T00

▶ When the display shows the parameter that has to be programmed press "OK" (= INFO/OK-button) to start programming.
▷ Now the programmable parameter value will blink (in the picture it is framed red).
▶ By turning the MENU-switch you will set the desired value in the display. Turning the switch to the right will increase the value, turning to the left decreases it.
▶ Save the value by pressing "OK".

▷ When programming K1 or K2 indication "no"or "nc" will blink afterwards.

14022T00

▶ Now select function "no" or "nc" with the MENU-switch and store this setting by pressing "OK".

☞	After confirmation of the last programmable value with "OK" the indication will return to normal operation and will show internal pressure.

no / nc

A contact that has been programmed as "nc" (= normally closed) is closed when differential pressure is missing. When e.g. 10 mbar (1000 Pa) and "nc" have been programmed for K1 this means that K1 will open at an overpressure of more than 10 mbar (1000 Pa).

Purging time

Purging time will start when the flow inside the enclosure reaches and keeps or exceeds the value that has been programmed with "PrStart". When the air flow stays below this value for more than 4 seconds the purging time is reset to 0. No contacts will switch until the purging time is over.

Purging times from 0 up to 255 minutes may be programmed. When no pre-purging is required purging time has to be set to 0 s. Indication of purging time will then be skipped when the parameters are called up with the INFO/OK-button, but it is still accessible in the programming menu.

8.4 Operating Modes

Main modes

The following main modes are available:

„ex valve“ Operation with an Ex-valve (function: n.c. = normally closed, the valve is voltage-free closed)

14023T00

„non-ex valve“ Operation with a non-Ex-valve (function: n.o. = normally open, the valve is voltage-free open)

14024T00

⚠ WARNING	
EX	In any case a non-ex valve (mode "non-ex valve") has to be fitted into the pressurized enclosure!

After the supply voltage is connected the display will indicate the set mode as described above.

You may now change to the other mode by pressing the INFO-/OK-button for 5 s.

Please note that the pressure sensors are adjusted to 0 mbar a few seconds after switching between the two modes. So no pressure must be existing at the control unit, no air must flow through it and the cabinet monitored by the control unit has to be open.

Normally neither switching of valve type nor calibration of pressure sensors is required from the user, because the control is programmed and calibrated in the factory.

As long as overpressure in the enclosure is too low the display now indicates "Low Pressure" and shows the over-pressure.

14025T00

Without pre-purging (purging time = 00.00 min.), without temperature sensor

Initially the overpressure in the enclosure compared to the environment is shown on the display. As long as this pressure is below 0.25 mbar "Low Pressure" is indicated and the pressure that has been measured. Regardless of programming both contacts K1 and K2 are open and the LEDs are turned off.

14026T00

As soon as the pressure exceeds minimum value of 0.25 mbar for a longer period of time the display shows for about 2 seconds the flow rate of the purge gas (see "with pre-purging“). Then it switches to "Operate" and again indicates the pressure in the enclosure.

14014T00

Contacts K1 and K2 now react according to programming to the measured pressure and the valve voltage. When an LED is illuminated then the respective contact is closed.

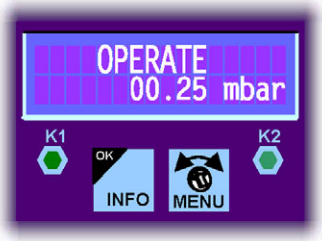

14027T00

When the internal pressure stays below the minimum value of 0.25 mbar for some time the devices switches off the operating mode "Operate". Indication again shows warning "Low Pressure" and the internal pressure. Both LEDs go out and contacts K1 and K2 are open again.

14028T00

With pre-purging (purging time > 00.00 min.), without temperature sensor

Initially the overpressure in the enclosure compared to the environment is shown on the display. As long as this pressure is below 0.25 mbar "Low Pressure" is indicated and the pressure that has been measured. Regardless of programming both contacts K1 and K2 are open and the LEDs are turned off.

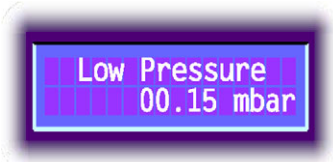

14026T00

As soon as the pressure exceeds the minimum value of 0.25 mbar the indication shows the flow rate of the purge gas. The upper line shows if the flow rate is above or below the programmed value for purging start (see "PrStart"). In the lower line the current flow rate may be seen as long as the minimum value for purging has not been reached.

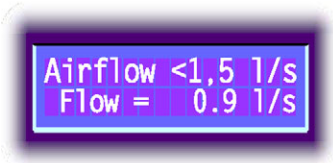

14029T00

When the minimum flow rate for purging has been reached the lower line shows the remaining purging time, if it is less than one minute it is shown in seconds. In the upper line it can be seen if the flow rate is above or below the programmed value.

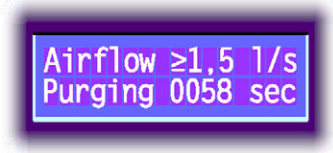

14030T00

When the flow rate is below the minimum limit value the counter for the purging time is at first only stopped. The figure showing the remaining purging time then blinks. As soon as there is enough air flow the counter starts working again.

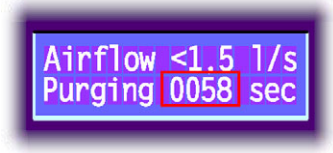

14031T00

When the flow rate falls below the limit value for a certain period of time purging is aborted. Display again shows the current flow rate and purging will start again as soon as the limit value is exceeded.

14032TT00

After purging the indication switches back to "Operate" and again shows the pressure inside the enclosure.

14014T00

When the internal pressure falls to 0.25 mbar or less the device switches to operating mode "Purgesafe®". Display shows the warning "Check Pressure" and also warns with a blinking backlight and it indicates the internal pressure. The processor independently notices if after a period without the required pressure purging is again required and it initiates purging as soon as pressure and volume flow are sufficient again.

14033T00

With temperature sensor

When a temperature sensor is connected to the 5-pole bushing the value it measures is also indicated besides the overpressure, but only in operating mode "Operate".

14034T00

With "Bypass"-switch

To be able to test devices that are connected to control unit 8625/1-60-.. without overpressure and air flow the control can be "bridged" with a "bypass"-switch so that contacts K1 and K2 switch over. This switch is connected to the 5-pole bushing.
This must not be done in Ex-atmosphere when the contacts turn on devices that are not explosion protected. That is why the display backlight blinks in warning when the "bypass"-switch is closed and in the lower line of the display the word "BYPASS" is shown during any operating mode.

14035T00

9 Putting into Operation

Before commissioning, ensure that:

- ✗ the cover of the control unit is correctly closed,
- ✗ unused cable entries are sealed with plugs certified to Directive 94/9/EC, and unused holes are sealed by stopping plugs certified to Directive 94/9/EC.
- ✗ the operating mode and the purging process is set according to the corresponding zone.

10 Maintenance

10.1 Regular Maintenance Work

- ▶ Consult the relevant regulations (e.g. IEC/EN 60079-17) to determine the type and extent of inspections.
- ▶ Plan the intervals so that any defects in the equipment which may be anticipated are promptly detected.

To check as part of the maintenance schedule:

- ✗ Check if the cables are clamped properly.
- ✗ Inspect the device for signs of visible damage.
- ✗ Compliance with the permitted temperatures in accordance with IEC/EN 60079-0.
- ✗ Make sure that the device is used according to its designated use

10.2 Cleaning

Only the viewing window of the control unit must be clean when it is heavily soiled.

✗ Clean with a moist cloth.
✗ Use water or mild, non-abrasive, non-scratching cleaning agents.
✗ Never use aggressive cleaning agents or solvents.

10.3 Repair work

⚠ WARNING	
	Danger due to improper repair! ▷ Improper repairs may impair the explosion protection! ▶ The control unit must be repaired only by the manufacturer!

Note in accordance with the Ordinance on Hazardous Substances

In accordance with the Waste Management Act dated 27.08.1986 (AbfG. §11 Special waste) the owner of special waste is responsible for the disposal. At the same time, the employer is obliged to protect his employees according to the Ordinance on Hazardous Substances dated 1.10.1986 (GefStoffV. §17 General Protection Duty).

Therefore, we must point out that:

1) all the devices and/or systems which are sent back to R. STAHL for repair must be free from hazardous substances (acids, caustics, solvents, explosive gas compounds, etc.).
2) all the devices and/or systems which are sent to R. STAHL must be handled in a way that they do not contain any dangerous liquids or other hazardous substances. Thus, devices and/or systems that have come into contact with dangerous substances (see GefStoffV.) must be neutralised.
3) the measures carried out under (1) and (2) during service and repair works must be confirmed in writing.
4) the costs that arise due to the disposal of hazardous substances during a repair will be invoiced to the owner.

11 Accessories and Spare Parts

⚠ Use only original accessories and spart parts from R. STAHL Schaltgeräte GmbH. Use of another company´s accessories and spare parts invalidates the warranty of R. STAHL Schaltgeräte GmbH.

12 Type Examination Certificate (Page 1)

Translation

(1) **EC-Type Examination Certificate**

(2) Equipment and protective systems intended for use in potentially explosive atmospheres, **Directive 94/9/EC**

(3)	**Certificate Number**	**TÜV 06 ATEX 553116**
(4)	for the equipment:	Control unit type 8625/1-..-.....-..
(5)	of the manufacturer:	**STAHL Schaltgeräte GmbH**
(6)	Address:	Am Bahnhof 30 74638 Waldenburg Germany
	Order number:	8000553116
	Date of issue:	2006-06-28

(7) This equipment or protective system and any acceptable variation thereto are specified in the schedule to this certificate and the documents therein referred to.

(8) The TÜV NORD CERT GmbH, notified body No. 0044 in accordance with Article 9 of the Council Directive of the EC of March 23, 1994 (94/9/EC), certifies that this equipment or protective system has been found to comply with the Essential Health and Safety Requirements relating to the design and construction of equipment and protective systems intended for use in potentially explosive atmospheres given in Annex II to the Directive. The examination and test results are recorded in the confidential report No. 06 YEX 553116.

(9) Compliance with the Essential Health and Safety Requirements has been assured by compliance with:

EN 50014:1997	**EN 50018:2000**	**EN 50019:2000**
EN 50020:1994	**EN 50028:1987**	**EN 50281-1-1:1998**

(10) If the sign "X" is placed after the certificate number, it indicates that the equipment or protective system is subject to special conditions for safe use specified in the schedule to this certificate.

(11) This EC-type examination certificate relates only to the design, examination and tests of the specified equipment in accordance to the Directive 94/9/EC. Further requirements of the Directive apply to the manufacturing process and supply of this equipment. These are not covered by this certificate.

(12) The marking of the equipment or protective system must include the following:

II 2 GD EEx e m ia IIC T4 T70°C IP 66 bzw.
II 2 GD EEx d m ia IIC T4 T70°C IP 66

TÜV NORD CERT GmbH, Langemarckstraße 20, 45141 Essen, accredited by the central office of the countries for safety engineering (ZLS), Ident. Nr. 0044, legal successor of the TÜV NORD CERT GmbH & Co. KG Ident. Nr. 0032

The head of the certification body

Schwedt

Hanover office, Am TÜV 1, 30519 Hanover, Fon +49 (0)511 986 1455, Fax +49 (0)511 986 1590

This certificate may only be reproduced without any change, schedule included.
Excerpts or changes shall be allowed by the TÜV NORD CERT GmbH

page 1/3

13 EC Declaration of Conformity

EG-Konformitätserklärung
EC-Declaration of Conformity
Déclaration de Conformité CE

Wir *(we; nous)*

R. STAHL Schaltgeräte GmbH, Am Bahnhof 30, 74638 Waldenburg, Germany **8625/1-60-..-..**

erklären in alleiniger Verantwortung, dass das Produkt **Steuereinheit**
hereby declare in our sole responsibility, that the product *Control unit*
déclarons, sous notre seule responsabilité, que le produit *Unité de commande*

mit der **EG-Baumusterprüfbescheinigung:**
(under; *EC-Type Examination Certificate:* **TÜV 06 ATEX 553116**
avec) *Attestation d'examen CE de type:*

auf das sich diese Erklärung bezieht, mit den folgenden Normen oder normativen Dokumenten übereinstimmt
which is the subject of this declaration, is in conformity with the following standards or normative documents
auquel cette déclaration se rapporte, est conforme aux normes ou aux documents normatifs suivants

Bestimmungen der Richtlinie *terms of the directive* *prescriptions de la directive*	**Nummer sowie Ausgabedatum der Norm** *Number and date of issue of the standard* *Numéro ainsi que date d'émission de la norme*
94/9/EG: ATEX-Richtlinie *94/9/EC: ATEX Directive* *94/9/CE: Directive ATEX*	EN 60079-0:2006 EN 60079-1:2004 EN 60079-2:2004 EN 60079-7:2003 EN 60079-11:2007 EN 60079-18:2004 EN 61241-0:2006 EN 61241-1:2004
2004/108/EG: EMV-Richtlinie *2004/108/EC: EMC Directive* *2004/108/CE: Directive CEM*	

Qualitätssicherung Produktion:
Production Quality Assessment: PTB 96 ATEX Q006-4
Assurance Qualité Production:

Kenn-Nr. der benannten Stelle / *Notified Body number / N° de l'organisme de certification:* 0102

Waldenburg, 21. Jan. 2009	i.V.	i.V.
Ort und Datum *Place and date* *Lieu et date*	**B. Limbacher** **Leiter Entwicklung** *Head of Development* *Directeur Développement*	**Dr. S. Jung** **Leiter Qualitätsmanagement** *Director Quality Management Dept.* *Directeur Dept. Assurance de Qualité*

156113 / 8625601300
2010-07-14·BA00·III·en·05